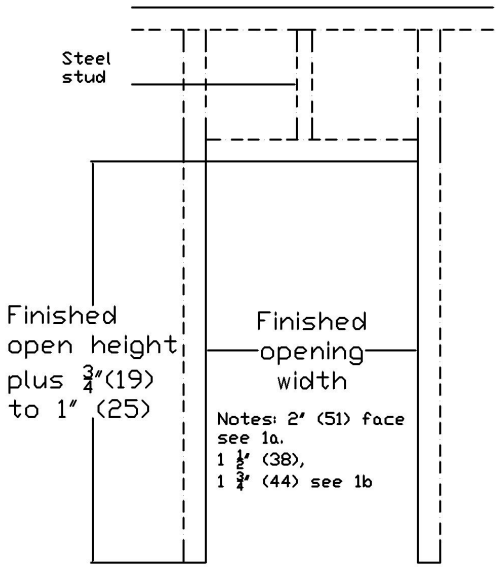

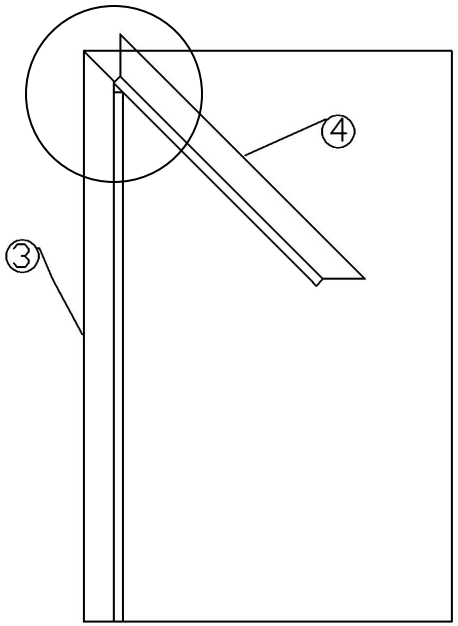

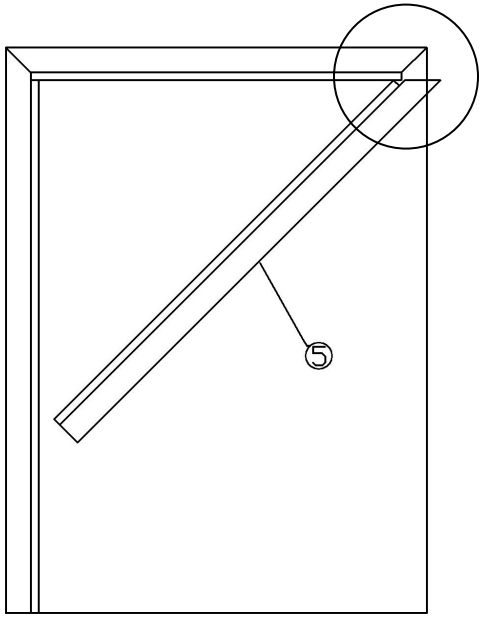

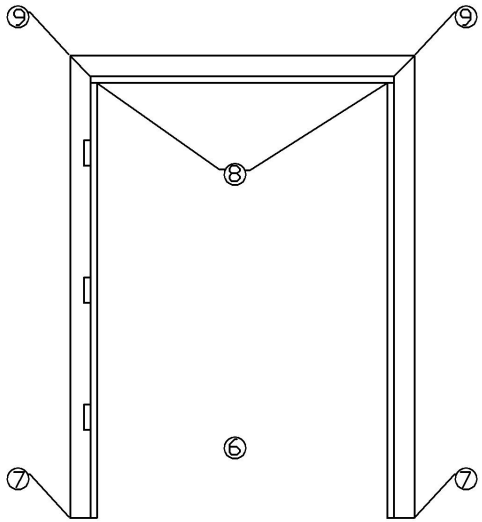

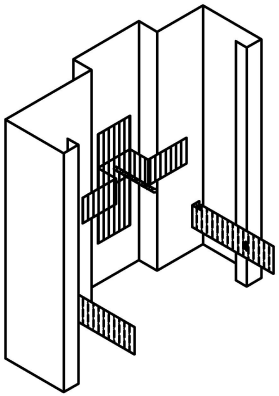

Compression Anchor
(CO) Standard

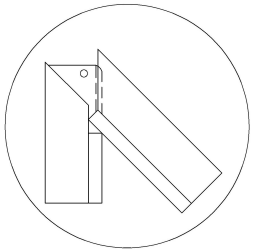

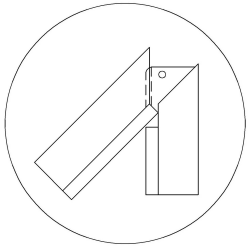

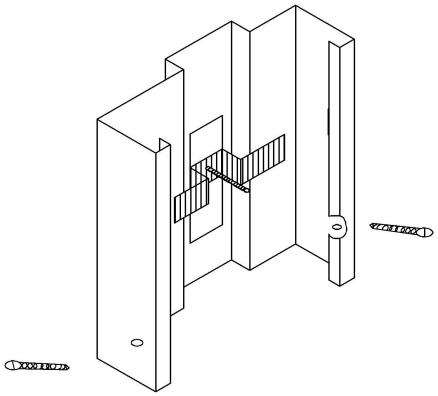

Compression Anchor
(CP) Optional

Custom Metal Products	Project:	**KD Drywall Pressure Fit Frame Details**	DWG N.T.S
	Drawn By: _____	Date: _____	Sheet _____ of _____